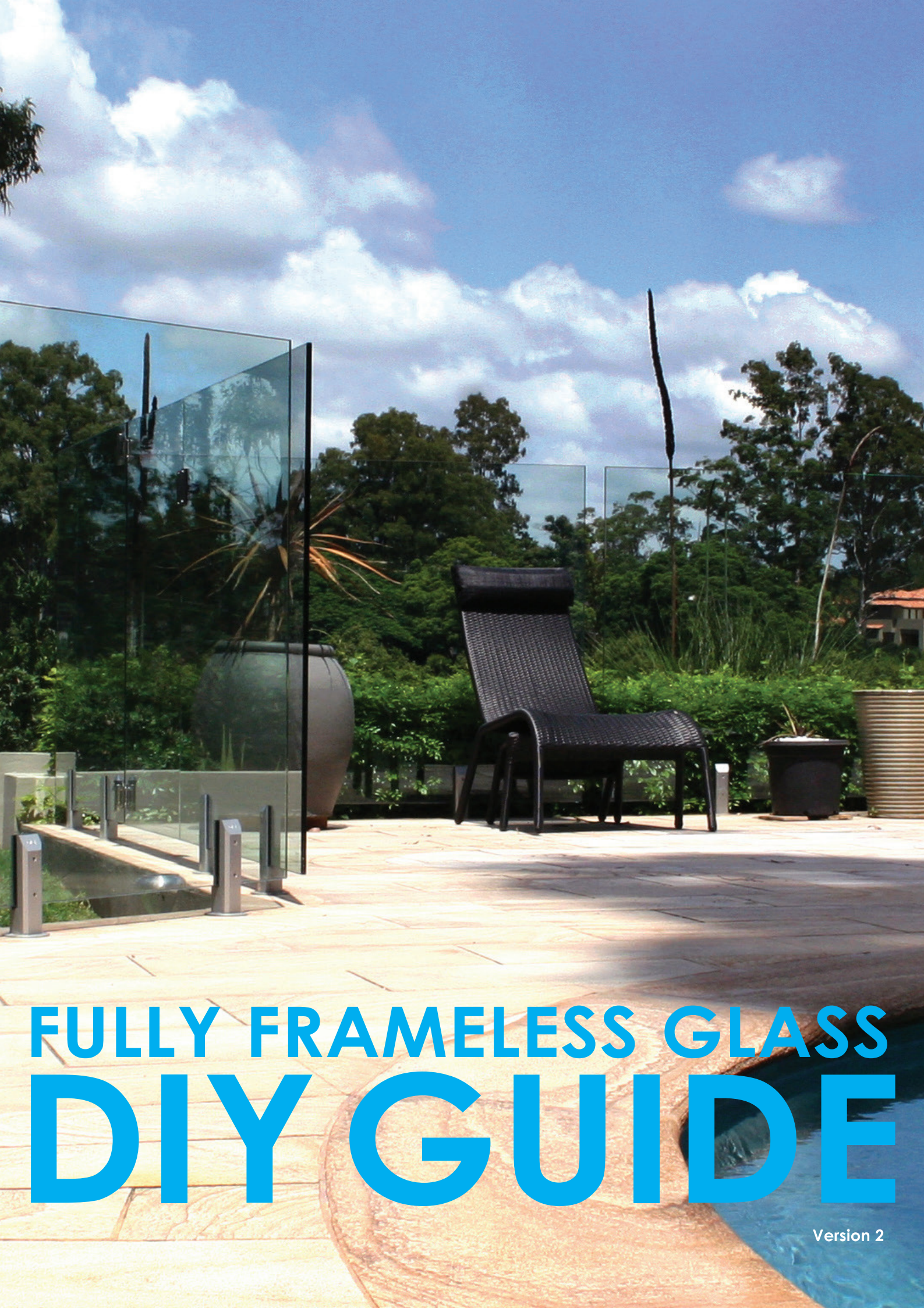

FULLY FRAMELESS GLASS DIY GUIDE

Version 2

site measure

Planning is the first step of any successful project. We have a large range of sizes to allow for varying site requirements. Simply decide where you would like your pool fence to be located.
Below are some great tips on measuring:

- The recommended distance from the edge of the pool is 1300mm or more - For fences closer than this 'earthing' must be considered
- Watch out for underground cables & pipes when core drilling
- Aim to use as many of the same sized panels as possible in order to create that designer look - However this can vary from site to site
- Use a steel tape measure to ensure correct measurements are taken
- If you are fixing to pavers, you need to form a concrete footing underneath & re-cement pavers onto concrete footing

moving & storing glass

Glass panels must never touch, lie against or rest on concrete, tiles or any hard surface. If moving your glass panels, always ensure they sit on rubber, timber or preferably both. Although your glass is safety toughened, if treated incorrectly the panels will shatter into small granules

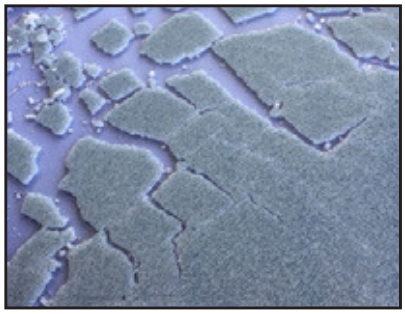

glass panel dimensions

Our glass panels are 1200mm in height and are made from 12mm thick Grade 'A' toughened glass. Glass gates are 8mm thick and are also made from Grade 'A' toughened glass.
For added look & safety, glass panels have 5mm radius safety corners.
The 12mm thick glass panels are available in sizes from 500mm wide x 1200mm high through to 2000mm wide x 1200mm high.
*** 36kg per lineal metre**

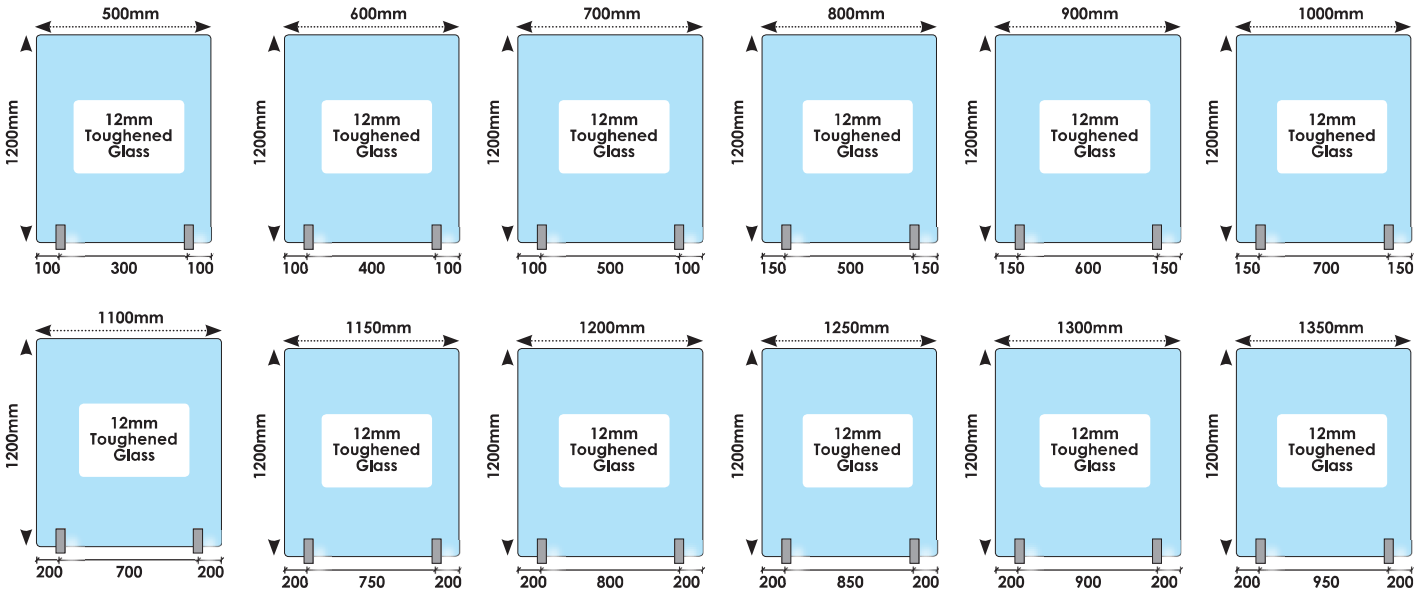

IMPORTANT:
When selecting panels do not exceed a 100mm gap between glass panels & existing structures such as posts, pillars or piers. Optimum gap is between 40 & 60mm.

glass panel dimensions

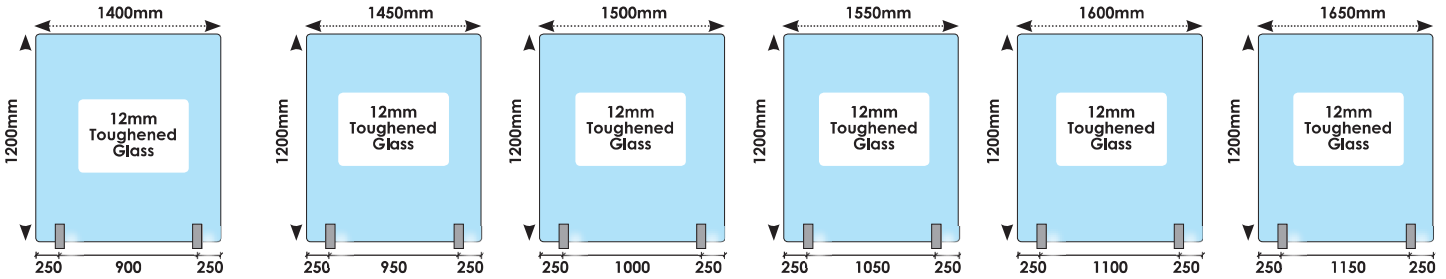

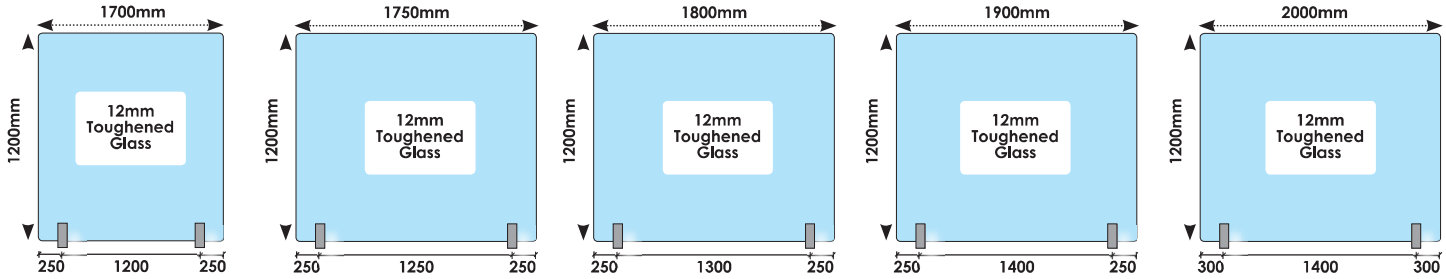

glass hinge panel sizes

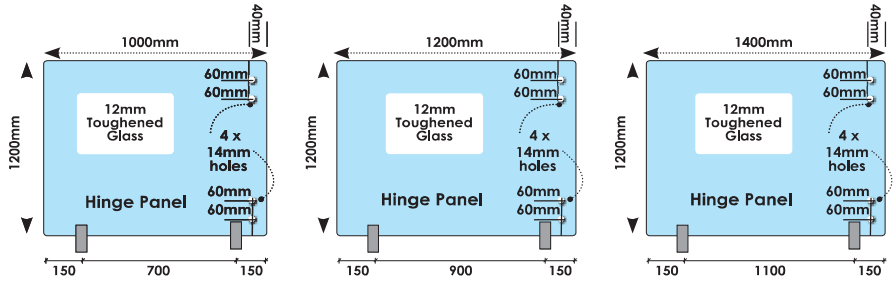

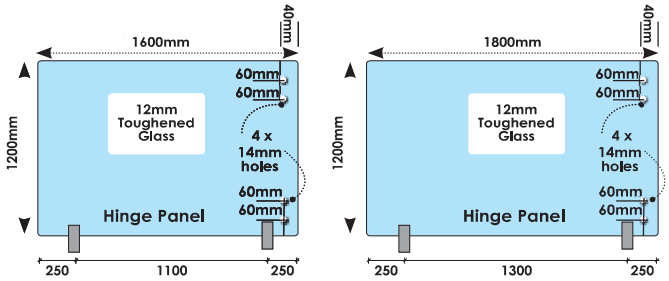

glass gate panel sizes

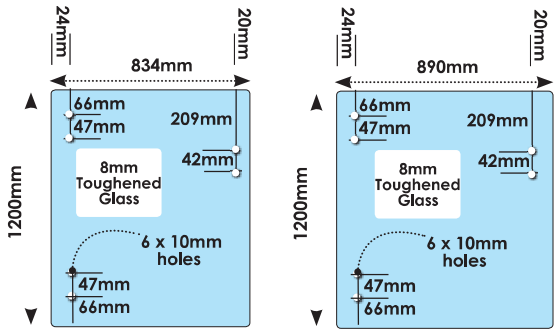

glass fence typical gate & panel set up

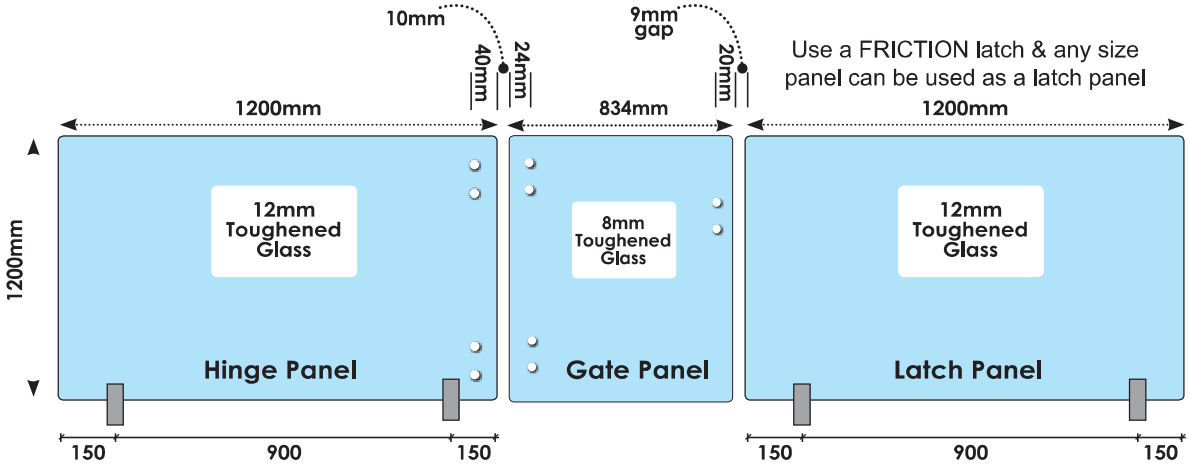

Use a FRICTION latch & any size panel can be used as a latch panel

your materials

For a standard Fully Frameless Glass fence project you will require:

- Glass Panels & Glass Gate
- Spigots & Dress Rings Or Domical Covers
- Stainless Steel Hinges
- Stainless Steel Latch
- Grout
- Glass Cleaner & Cloth
- Dyna Bolts (for base plate application)

tools required

You will require some basic tools in order to complete your glass fence project installation:

- Steel Tape Measure
- Chalk Line
- String Line
- Core Driller - For Core Drill Spigots Application
- Hammer Drill - For Base Plate Spigots Application
- Bucket For Mixing Grout
- Allen Key Set
- Spirit Level
- Mats Or Blankets

location

Ring before you begin!
Simply consult your local council before installing a pool fence to ensure compliance with any local by-laws. Council regulations vary from region to region and can help with decisions on distances and heights of fences from neighbours and pavements. Mandatory safety regulations need to be adhered.

fixing method: base plate spigots

Mark out the centre line of proposed glass fence with a chalk line. Determine clamp location based on a sheet size (recommendation on pages 1 & 2). Use base plate as a template to mark out the hole positions and drill holes to suit.

Note: Do not exceed 100mm gaps between glass panels. Optimum gap is 40mm to 60mm

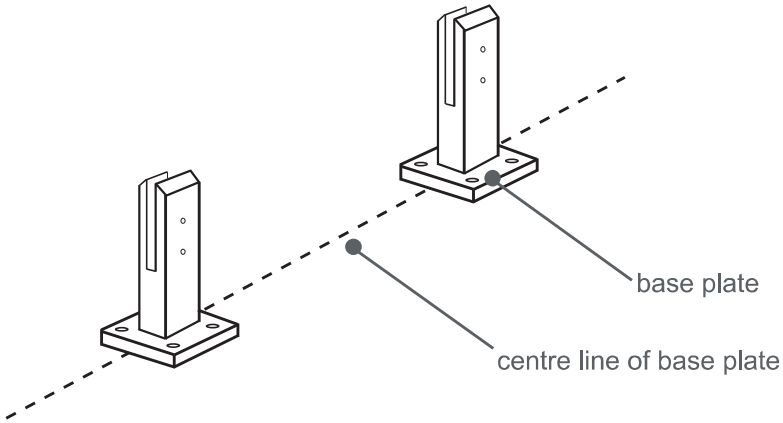

Now the base plated spigots can be fitted to the floor and plumbed via shims (not supplied) under the base plates. Be sure to tighten firmly as the smallest of movement at the base plate will result in noticeable movement at the bottom of the glass fence.

Tip: By setting the two outer spigots of your total span, a string line can be run in the 'throat' of the spigots, giving correct height for all spigots in between

Note: Do not exceed 100mm gap from the fixing surface to the bottom of the glass

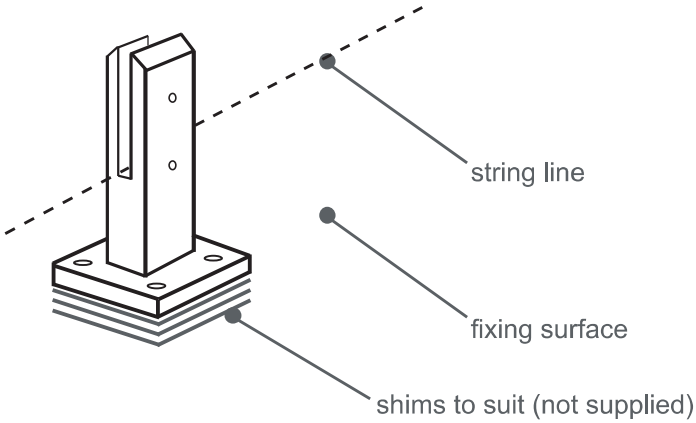

When all spigots are installed, slip domical cover the top of the spigot to hide fixings. It will be necessary to turn the adjustment screws on the spigot face all the way in to allow cover to pass over

Note: Same installation method applies to round base plate spigot

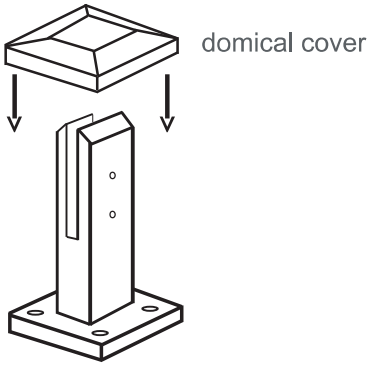

The glass is then installed to the spigots.
Place plastic packers between glass & spigot, at no stage should glass touch the metal

How friction adjustability works:

1. Place glass in spigot
2. Fix/ tension glass from grub screw side with allen key. Plastic packers can be added or removed to adjust glass laterally and also for tilt adjustment.

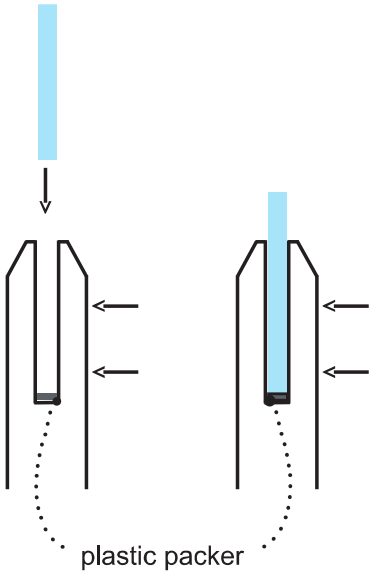

fixing method: core drill spigots

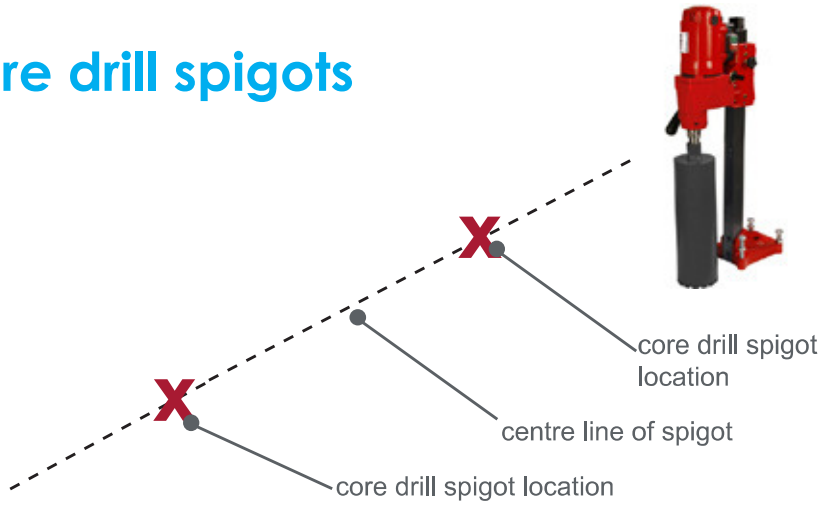

Mark out the centre line of proposed glass fence with a chalk line. Determine spigot location based on a sheet size (recommendation on pages 1 & 2). Once spigot positions are marked, core drill a 70mm diameter hole at 110mm deep. **Ensure no wiring or underground pipe will be affected.** Remove the core and clean the any excess water & concrete which may obstruct spigot

Note: Do not exceed 100mm gaps between glass panels. Optimum gap is 40mm to 60mm

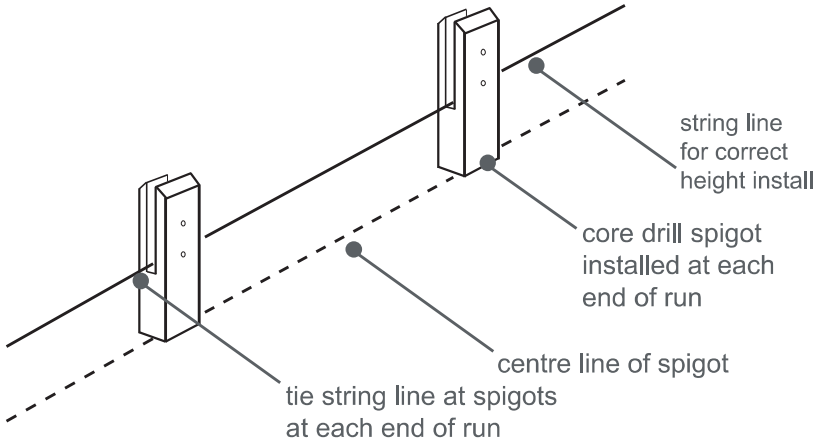

Check level of floor to determine the height of each spigot. We suggest installing a spigot at each end of a straight run and then use a string line to set the spigot heights inbetween.

Note: Do not exceed 100mm gaps from fixing surface to the bottom of the glass

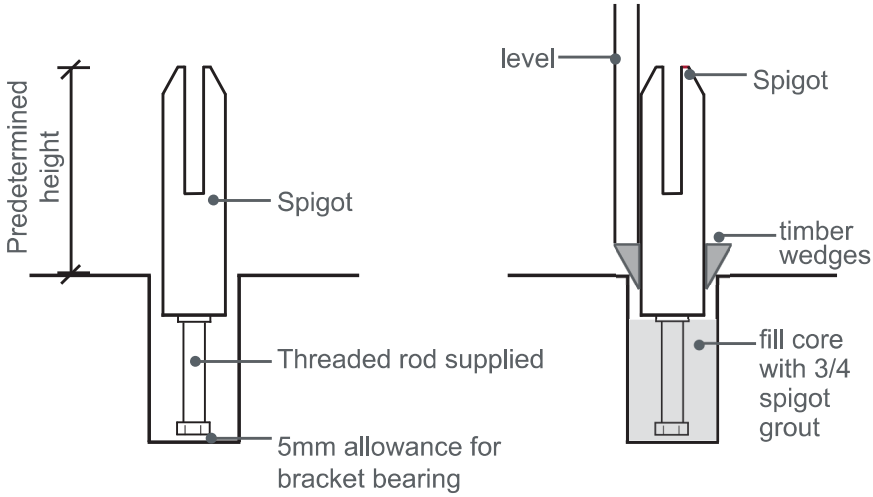

The following procedure is done one hole at a time. Mix the spigot grout in a small container (refer to manufacturer's specifications), enought to fill 3/4 of the hole. Position spigot in hole and hold in place using a small timber wedge until firm (approx 15 mins). While grout is wet, clean any excess with a wet sponge. When removing the timber wedges top up the core holes with grout. It is important to position spigots in the correct line and as plumb as possible to minimise glass adjustment.

Tip: Ensure spigots are well protected from grout 'splatter' whilst installing

Note: Never use 'quick set cement' or similiar cement products. *Your fence will fail* using these products

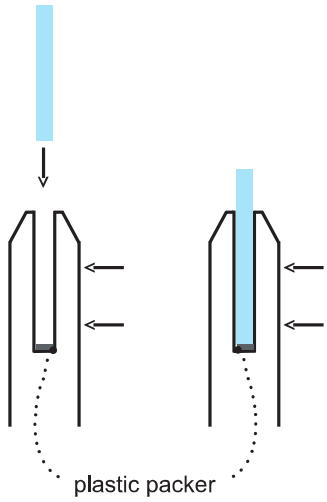

When all spigots are installed slip dress ring over clamp. It will neccesary to turn the adjusting screws on the spigot face all the way in to allow the dress ring to pass over

Place plastic packers between glass & spigot, at no stage should glass touch the metal

The glass is then installed to the spigots.
How friction adjustability works:
1. Place glass in spigot
2. Fix/ tension glass from grub screw side with allen key. Plastic packers can be added or removed to adjust glass laterally and also for tilt adjustment.

gate layouts

1 Glass To Glass Application

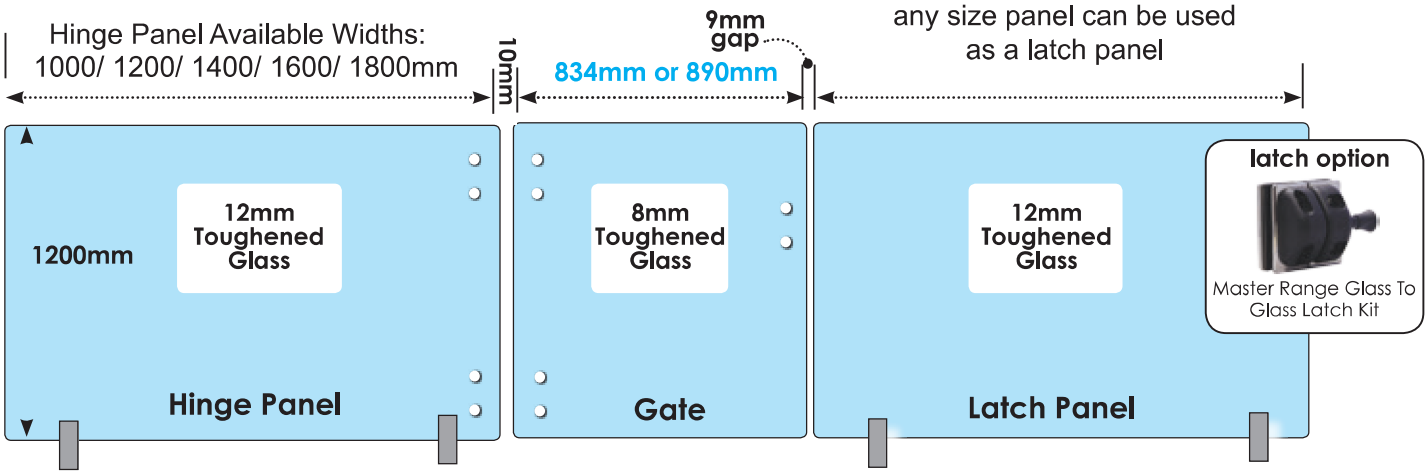

2 Glass To Wall Application

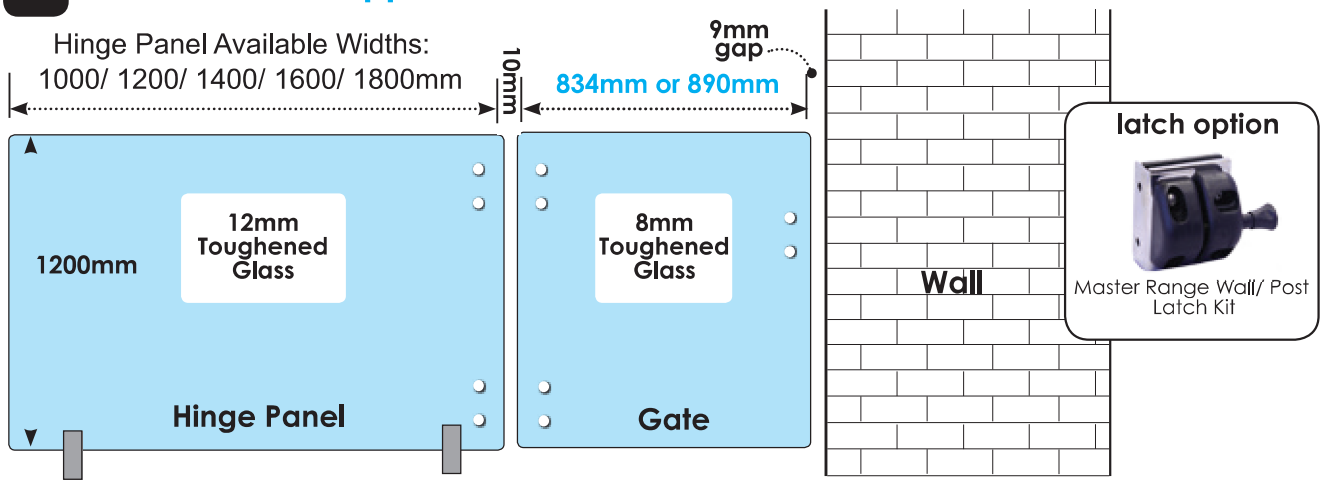

IMPORTANT:
Gate must hinge away from pool

gate layouts

3 Wall To Glass Latch Application

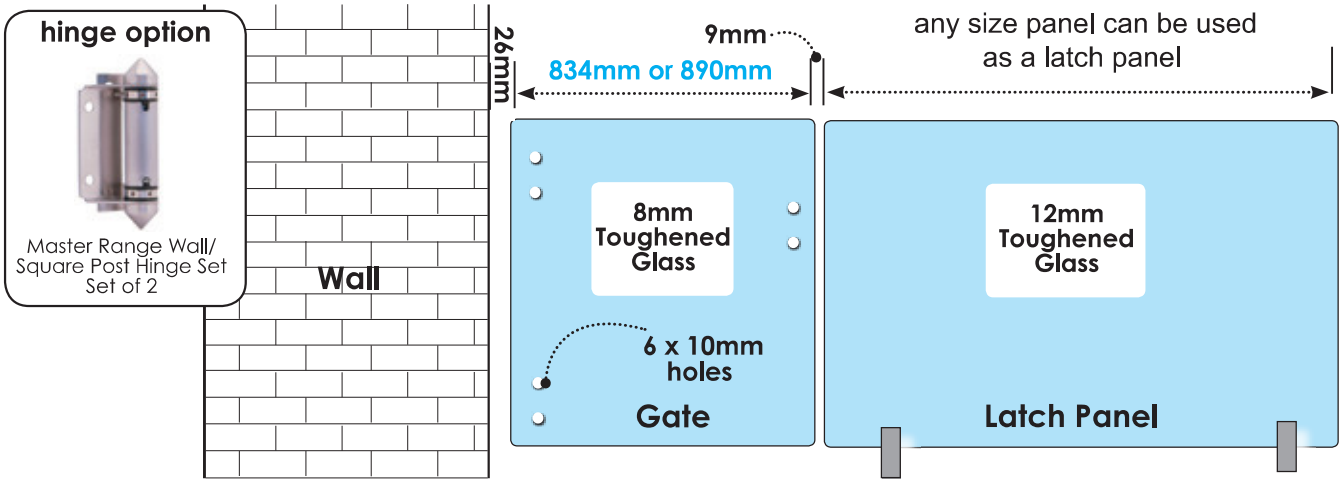

4 Glass To 90 Degree Corner Application

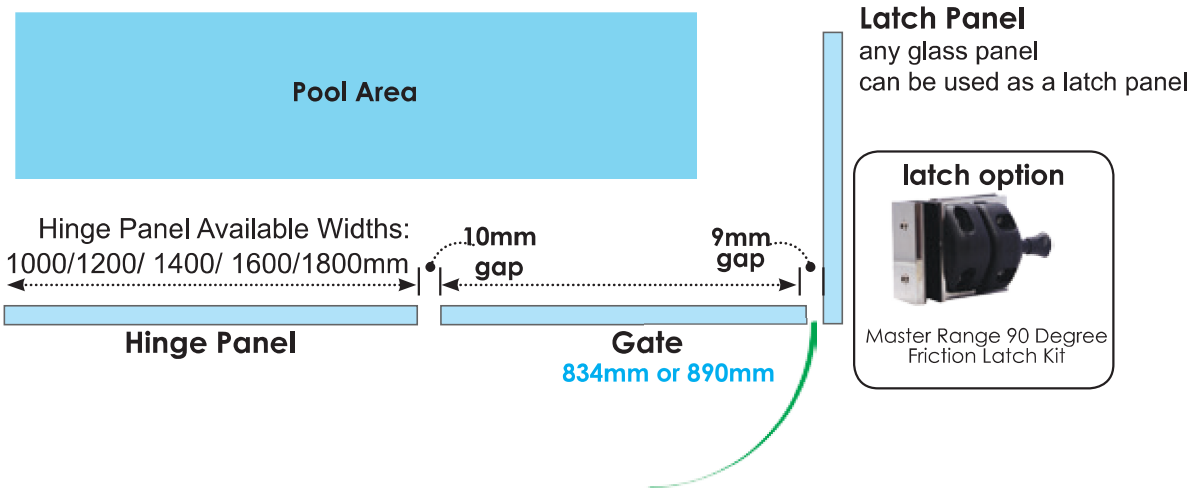

IMPORTANT:
Gate must hinge away from pool

gate hardware installation

IMPORTANT:
Gate must hinge away from pool

Glass To Glass Application

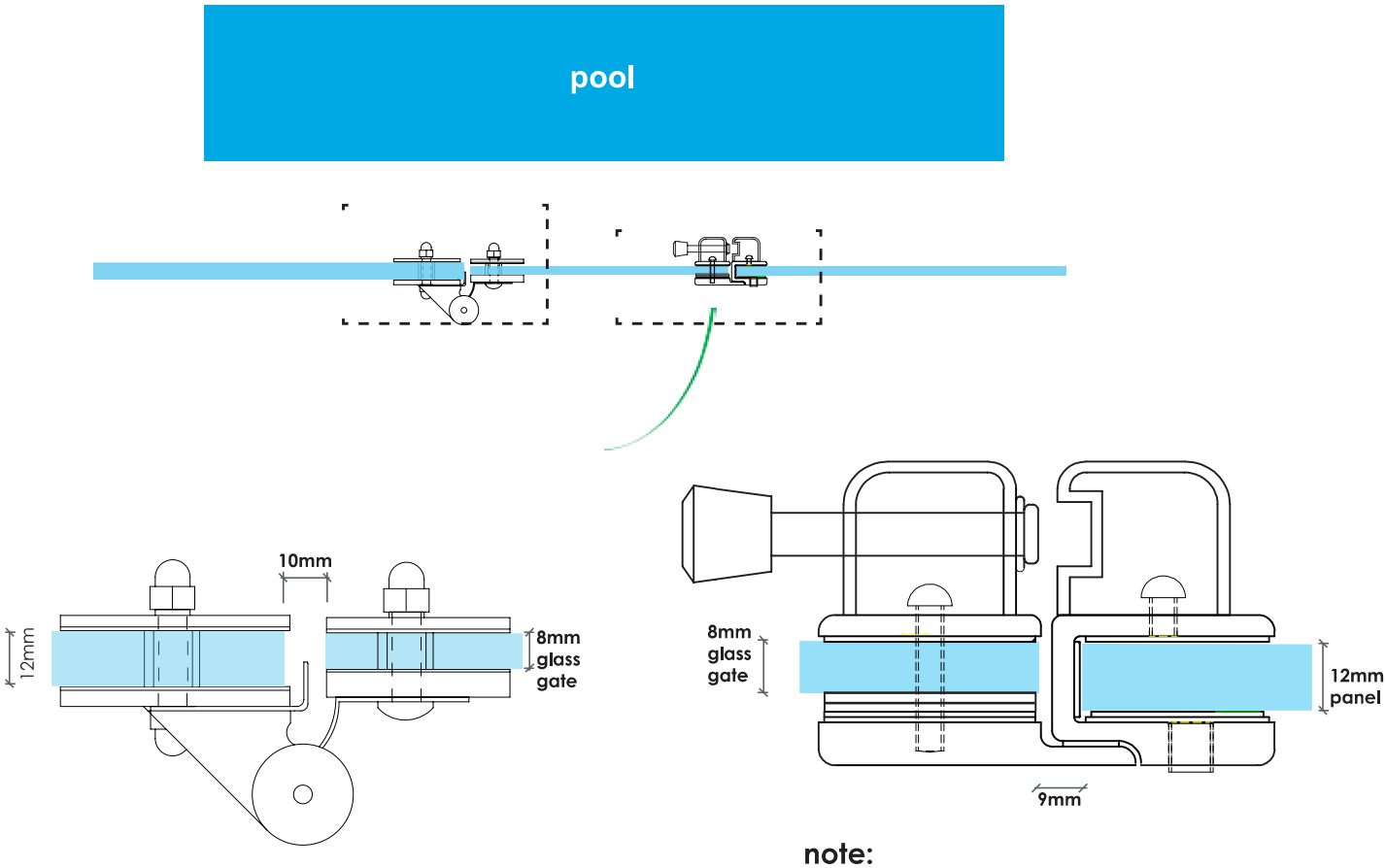

note:
extra packers (supplied) may be required

Glass To Wall Application

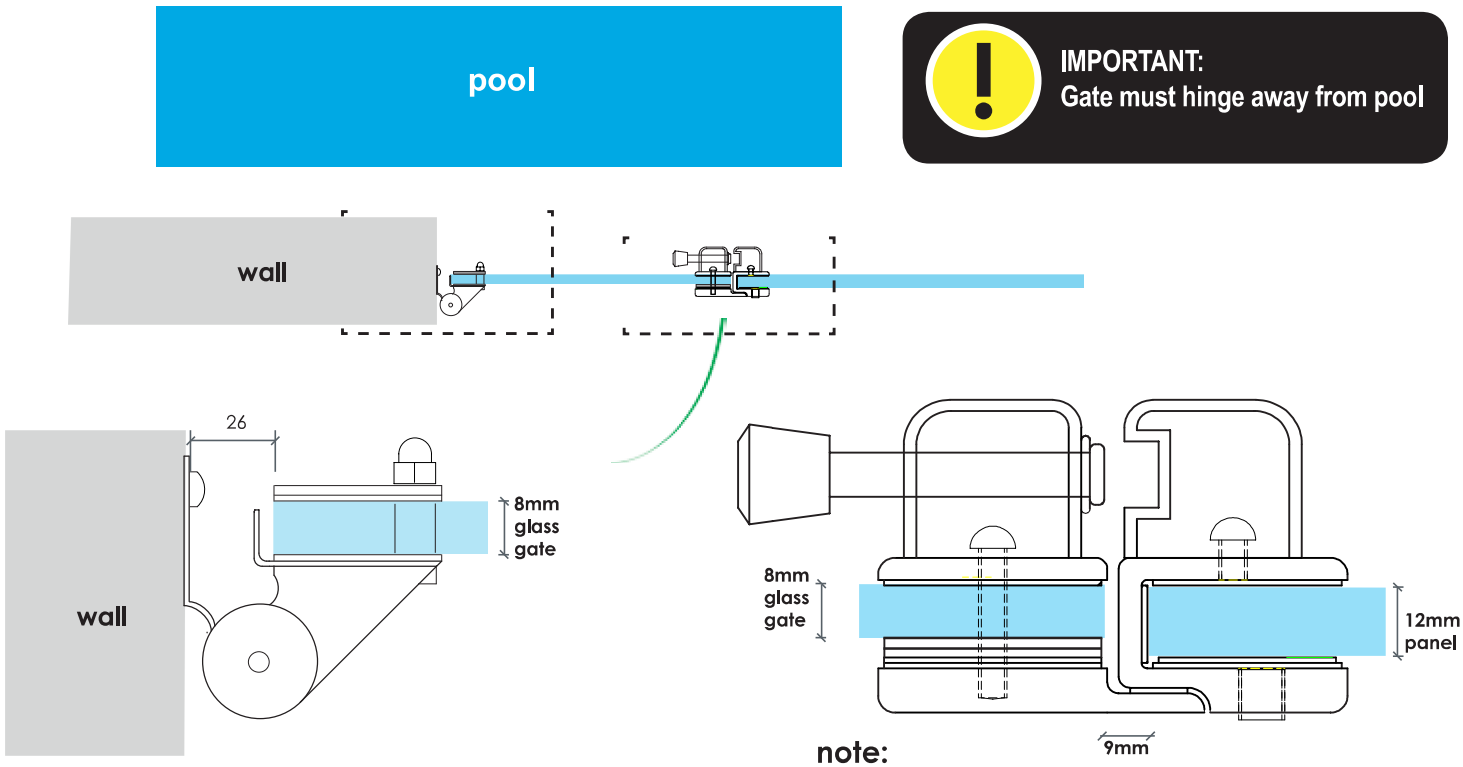

IMPORTANT:
Gate must hinge away from pool

note:
extra packers (supplied) may be required

hinge tensioning guide

hinge

+

70mm tensioning tool

+

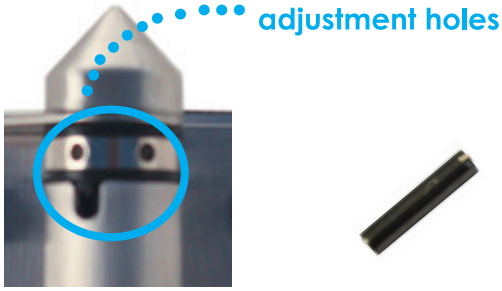

15mm stop

1. With 70mm tension tool, remove the 15mm stop, located in adjustment holes & bolt hinge to the hinge panel & gate
2. Install the latch hardware
3. Using the 70mm tension tool re-apply tension to spring as required & apply '15mm stop' to adjustment holes

IMPORTANT:
Gate must self close from all opened positions to a latched position

finishing touches

Just a few more things to finish off your new fully-frameless glass fence:

- Wipe down the glass panels & spigots with some soapy water to ensure they are clean from any dirt or residue
- Remove any access dirt, tools & enjoy your pool safely with your new glass fence

*Disclaimer: This DIY Guide is provided as a guide only and no responsibility is accepted in relation to the installation of the pool fence. Seek professional assistance if you are uncertain as to any aspect of the measure and installation.

tips! For glass handling & installing

Glass handling should be done with the utmost care and attention. Guidelines recommended include employing a number of checks prior to undertaking any activity :

- Ensure that there is sufficient room to maneuver the glass
- Check the weight prior to lifting, if too heavy, call for assistance or use other means
- Use safe lifting posture
- When lifting glass, it should be kept upright and movement smooth to avoid undue flexing

Recommended personal protective equipment used when undertaking activities with glass include :

- Suitable gloves (non-slip)
- Steel capped boots are always a good idea
- Safety glasses
- Suction cups and lifting devices (if large pieces of glass moved)
- Clothing should be tight fitting so that no loose items can catch the glass causing trips and falls

Glass should be stored in dry conditions on its edge and should not come in contact with any substance harder than itself. Also, glass should be stored having an inclination of 3 degrees for static racks and 5-6 degrees for transportable racks and trolleys and in both cases supported evenly over its surface area. If glass is transported in a crate laying horizontally, unpack the glass as soon as practicable and store in the recommended upright position with incline. Do not put glass bottom edge directly on the ground when storing upright – always put suitable timber/hard rubber blocks under the bottom edge so as to avoid chipping edges.

FULLY FRAMELESS GLASS

DIY GUIDE

NOT TO SCALE

notes: